Work Order ID 74481

Monday, October 03, 2011 10:26:14 AM

Item ID: D2662-1 **Accept** **Setup Start** **Stop**

Revision ID:

Item Name: Saddle, LH In 206

Start Date: 9/30/2011 **Start Qty:** 10.00 **Cust Item ID:**

Required Date: 10/28/2011 **Req'd Qty:** 10.00 **Customer:**

Reference:

Approvals: **Process Plan:** M.L.J **Date:** 11/10/03 **Tooling:** _____ **Date:** _____ **Run Start** **Stop**

QC: _____ **Date:** _____ **SPC (Y/N):** _____ **Date:** _____

Sequence ID/ Work Center ID	Operation Description	Set Up/ Run Hours	Tool ID	Tool #	Plan Code	Accept Qty	Reject Qty	Reject Number	Insp. Stamp
Draw Nbr	**Revision Nbr**								
D2662	Rev D								
100	HAAS CNC VERTICAL MACHINING #1	0.00							
HAAS 1	**Memo**	0.00							
HAAS CNC vertical machine #1	Program part number and batch number. Inspect part number and batch number are programmed MACHINE AS PER FOLIO FB068 & DWG DWG REV: D FOLIO REV: AA	JL 11-11-08			10				
110	CONVENTIONAL MILLING MACHINE	0.00							
Mill Conv	**Memo**	0.00				10			
Conventional Milling Machine	Machine Keyway and inspect per attached dimension sheet	JL 11-11-08							

Dart Aerospace Ltd

W/O:		WORK ORDER CHANGES					
DATE	STEP	PROCEDURE CHANGE	By	Date	Qty	Approval Chief Eng / Prod Mgr	Approval QC Inspector

Part No: _____ **PAR #:** _____ **Fault Category:** _____ **NCR:** Yes No **DQA:** _____ **Date:** _____

Resolution: _____ **Disposition:** _____ **QA: N/C Closed:** _____ **Date:** _____

NCR:		WORK ORDER NON-CONFORMANCE (NCR)						
DATE	STEP	Description of NC Section A	Corrective Action Section B			Verification Section C	Approval Chief Eng	Approval QC Inspector
			Initial Chief Eng	Action Description Chief Eng	Sign & Date			

NOTE: Date & initial all entries

H:\FORMS\Quality Assurance\approved QA\NCRWO RevE

Work Order ID 74481

Monday, October 03, 2011 10:26:14 AM

Item ID: D2662-1 **Accept** **Setup Start**

Revision ID: **Stop**

Item Name: Saddle, LH In 206

Start Date: 9/30/2011 **Start Qty:** 10.00 **Cust Item ID:**

Required Date: 10/28/2011 **Req'd Qty:** 10.00 **Customer:**

Reference:

Run Start

Approvals: **Process Plan:** _____ **Date:** _____ **Tooling:** _____ **Date:** _____ **Stop**

QC: _____ **Date:** _____ **SPC (Y/N):** _____ **Date:** _____

Sequence ID/ Work Center ID	Operation Description	Set Up/ Run Hours	Tool ID	Tool #	Plan Code	Accept Qty	Reject Qty	Reject Number	Insp. Stamp
120	QC2- Inspect parts off machine FAI/FAIB	0.00 SL 11-11-08							
QC	Memo	0.00				10	ø		
Quality Control									
130	QC8- Inspect parts - second check	0.00 ok 11/11/08							
QC	Memo	0.00				10	ø		
Quality Control									
140	Chemical Conversion Coat per QSI005 4.1	0.00							
HandFinish	Memo	0.00				10	BL 11-11-9.		
Hand Finishing									

Dart Aerospace Ltd

W/O:		WORK ORDER CHANGES					
DATE	STEP	PROCEDURE CHANGE	By	Date	Qty	Approval Chief Eng / Prod Mgr	Approval QC Inspector

Part No: _____ **PAR #:** _____ **Fault Category:** _____ **NCR:** Yes No **DQA:** _____ **Date:** _____

Resolution: _____ **Disposition:** _____ **QA: N/C Closed:** _____ **Date:** _____

NCR:		WORK ORDER NON-CONFORMANCE (NCR)						
DATE	STEP	Description of NC Section A	Corrective Action Section B			Verification Section C	Approval Chief Eng	Approval QC Inspector
			Initial Chief Eng	Action Description Chief Eng	Sign & Date			

NOTE: Date & initial all entries

H:\fFORMS\Quality Assurance\approved QA\NCRWO RevE

Work Order ID 74481

Monday, October 03, 2011 10:26:14 AM

Item ID: D2662-1 **Accept** **Setup Start** **Stop**

Revision ID:

Item Name: Saddle, LH In 206

Start Date: 9/30/2011 **Start Qty:** 10.00 **Cust Item ID:**

Required Date: 10/28/2011 **Req'd Qty:** 10.00 **Customer:**

Reference:

Run Start **Stop**

Approvals: **Process Plan:** _____ **Date:** _____ **Tooling:** _____ **Date:** _____

QC: _____ **Date:** _____ **SPC (Y/N):** _____ **Date:** _____

Sequence ID/ Work Center ID	Operation Description	Set Up/ Run Hours	Tool ID	Tool #	Plan Code	Accept Qty	Reject Qty	Reject Number	Insp. Stamp
150	White Gloss(Ref:4.3.5.1) per QSI005 4.3-Alum	0.00							
Powdercoat						10X	Ø	MJ	11/11/11
	Memo	0.00							
Powder Coating	START TIME: 8:10 OVENTEMPERATURE: 320 0F FINISH TIME: 8:40								
M118439									
160	QC3- Inspect Part Finish	0.00							
QC						10	BL	11-11-11	
	Memo	0.00							
Quality Control									
170	Identify as per dwg & Stock Location: ST476	0.00							
Packaging						SP	11-11-11		
	Memo	0.00							
Packaging									

Dart Aerospace Ltd

W/O:		WORK ORDER CHANGES					
DATE	STEP	PROCEDURE CHANGE	By	Date	Qty	Approval Chief Eng / Prod Mgr	Approval QC Inspector

Part No: _____ **PAR #:** _____ **Fault Category:** _____ **NCR:** Yes No **DQA:** _____ **Date:** _____

Resolution: _____ **Disposition:** _____ **QA: N/C Closed:** _____ **Date:** _____

NCR:		WORK ORDER NON-CONFORMANCE (NCR)						
DATE	STEP	Description of NC Section A	Corrective Action Section B			Verification Section C	Approval Chief Eng	Approval QC Inspector
			Initial Chief Eng	Action Description Chief Eng	Sign & Date			

NOTE: Date & initial all entries

H:\FORMS\Quality Assurance\approved QA\NCRWO RevE

Work Order ID 74481

Monday, October 03, 2011 10:26:14 AM

Item ID: D2662-1 **Accept** **Setup Start**

Revision ID:

Item Name: Saddle, LH In 206 **Stop**

Start Date: 9/30/2011 **Start Qty:** 10.00 **Cust Item ID:**

Required Date: 10/28/2011 **Req'd Qty:** 10.00 **Customer:**

Reference:

Run Start

Approvals: **Process Plan:** _____ **Date:** _____ **Tooling:** _____ **Date:** _____

Stop

QC: _____ **Date:** _____ **SPC (Y/N):** _____ **Date:** _____

Sequence ID/ Work Center ID	Operation Description	Set Up/ Run Hours	Tool ID	Tool #	Plan Code	Accept Qty	Reject Qty	Reject Number	Insp. Stamp
180	QC21- Final Inspection - Work Order Release	0.00						11/11/15	
QC Quality Control	Memo	0.00							

~~74~~

JC 11-11-14

(10)

Dart Aerospace Ltd

W/O:		WORK ORDER CHANGES					
DATE	STEP	PROCEDURE CHANGE	By	Date	Qty	Approval Chief Eng / Prod Mgr	Approval QC Inspector

Part No: _____ **PAR #:** _____ **Fault Category:** _____ **NCR:** Yes No **DQA:** _____ **Date:** _____

Resolution: _____ **Disposition:** _____ **QA: N/C Closed:** _____ **Date:** _____

NCR:		WORK ORDER NON-CONFORMANCE (NCR)						
DATE	STEP	Description of NC Section A	Corrective Action Section B			Verification Section C	Approval Chief Eng	Approval QC Inspector
			Initial Chief Eng	Action Description Chief Eng	Sign & Date			

NOTE: Date & initial all entries

H:\fFORMS\Quality Assurance\approved QA\NCRWO RevE

Picklist Print

Monday, October 03, 2011 10:26:19 AM

Work Order ID: 74481

Parent Item: D2662-1

Parent Item Name: Saddle, LH In 206

Start Date: 9/30/2011 **Required Date:** 10/28/2011

Start Qty: 10.00 **Required Qty:** 10.00

Comments: IPP: C□00.06.22□Removed P/O for powder coat□EC□
IPP Rev:D As per Rev D 07-03-19 JLM

Component Item ID/ Item Name	Replacement Item ID	Mfg/ Purch	Bin Item	Primary Location	Last Location	Route Seq ID	Unit of Measure	Qty on Hand	Qty per Kit	Total Qty	Qty Issued	Date Issued	Status
D6101-001 Saddle Billet		Manufactured	No			100	Each	4.0000	1	10	JL 11-11-07		

Location	Loc Qty	Loc Code
MAT040	4	
66965	1	
69677	2	
73768	1	

74648

10

Dart Aerospace Ltd

W/O:		WORK ORDER CHANGES					
DATE	STEP	PROCEDURE CHANGE	By	Date	Qty	Approval Chief Eng / Prod Mgr	Approval QC Inspector

Part No: _____ **PAR #:** _____ **Fault Category:** _____ **NCR:** Yes No **DQA:** _____ **Date:** _____

Resolution: _____ **Disposition:** _____ **QA: N/C Closed:** _____ **Date:** _____

NCR:		WORK ORDER NON-CONFORMANCE (NCR)						
DATE	STEP	Description of NC Section A	Corrective Action Section B			Verification Section C	Approval Chief Eng	Approval QC Inspector
			Initial Chief Eng	Action Description Chief Eng	Sign & Date			

NOTE: Date & initial all entries

H:\fFORMS\Quality Assurance\approved QA\NCRWO RevE

DART AEROSPACE LTD	Work Order:	74481
Description: 206 Saddle, Inboard, Left side	Part Number:	D2662-1
Inspection Dwg: D2662 Rev. D		Page 1 of 1

Inspect dimensions highlighted on inspection sheet drawing D2662 Rev. D and record below:

				Recorded Actual Dimensions					
Dim	**Min**	**Max**	**Go/No Go Gauge**	**1**	**2**	**3**	**4**	**By S**	**Date**
A	0.100	0.140		.120	.120	.120	.120	.120	
B	0.100	0.140		.132	.132	.133	.132	.132	
C	1.125	1.145		1.139	1.139	1.139	1.139	1.140	
D	0.615	0.685		.685	.685	.685	.685	.685	
E	0.240	0260		.247	.247	.247	.246	.246	
F	1.313	1.343		1.325	1.325	1.324	1.324	1.324	
G	0.210	0.230		.220	.220	.219	.220	.220	
H	0.100	0.180		.140	.140	.140	.140	.140	
I	2.470	2.510		2.490	2.490	2.490	2.490	2.490	
J	1.565	1.585		1.579	1.579	1.579	1.579	1.580	
K	0.235	0.240		.238	.238	.238	.238	.238	
L	0.100	0.120		.113	.113	.113	.113	.113	
M	0.990	1.010		1.000	1.000	1.000	1.000	1.000	
N	0.510	0.515		.512	.512	.512	.512	.512	
O	5.990	6.010		6.000	6.000	6.000	6.000	6.000	
P	1.245	1.255		1.250	1.250	1.250	1.250	1.250	
Q	2.495	2.505		2.500	2.500	2.500	2.500	2.500	
R	0.313	0.318		.313	.313	.313	.313	.313	
S	0.315	0.322		.316	.316	.316	.316	.316	
T	2.495	2.505		2.500	2.500	2.500	2.500	2.500	
U	1.357	1.367		1.362	1.362	1.362	1.362	1.362	
V	0.787	0.807		.797	.795	.796	.796	.797	
W	0.540	0.560		.551	.550	.550	.550	.550	
X	1.674	1.684		1.679	1.679	1.679	1.679	1.679	
Y	0.257	0.262		.257	.257	.257	.257	.257	
Z	0.912	0.932		.922	.922	.922	.922	.922	
AA	0.490	0.510		.501	.499	.498	.499	.499	
AB	0.178	0.198		.188	.188	.188	.188	.188	
AC									
AD									
AE									
AF									
Accept/Reject									

Measured by:	SK
Date:	11-11-07

Audited by	[illegible]
Date:	11/11/08

Rev	Date	Change	Revised by	Approved
A		New Issue	RF	
B	99.04.19	Incorporated DSI 9095, DSI 9102 & DSI 9122 Rev. A	RF	
C	99.11.11	Added Dim. R-T	RF	
D	02.12.12	R-format; Added Dim. U-W & DT8683, DT8686 & DT8695 A/B	KJ/RF	
E	06.07.05	Revised per drawing revision C	KJ/JLM	
F	07.03.21	Revised per drawing revision D	KJ/JLM	

Dart Aerospace Ltd

W/O:		WORK ORDER CHANGES					
DATE	STEP	PROCEDURE CHANGE	By	Date	Qty	Approval Chief Eng / Prod Mgr	Approval QC Inspector

Part No: _____ **PAR #:** _____ **Fault Category:** _____ **NCR:** Yes No **DQA:** _____ **Date:** _____

Resolution: _____ **Disposition:** _____ **QA: N/C Closed:** _____ **Date:** _____

NCR:		WORK ORDER NON-CONFORMANCE (NCR)						
DATE	STEP	Description of NC Section A	Corrective Action Section B			Verification Section C	Approval Chief Eng	Approval QC Inspector
			Initial Chief Eng	Action Description Chief Eng	Sign & Date			

NOTE: Date & initial all entries

DART AEROSPACE LTD	Work Order:	74481
Description: 206 Saddle, Inboard, Left side	Part Number:	D2662-1
Inspection Dwg: D2662 Rev. D		Page 1 of 1

Inspect dimensions highlighted on inspection sheet drawing D2662 Rev. D and record below:

				Recorded Actual Dimensions					
Dim	Min	Max	Go/No Go Gauge	~~1~~ 6	~~2~~ 7	~~3~~ 8	~~4~~ 9	~~By~~ 10	Date
A	0.100	0.140		.120	.121	.120	.120	.120	
B	0.100	0.140		.132	.132	.133	.133	.133	
C	1.125	1.145		1.139	1.139	1.139	1.139	1.139	
D	0.615	0.685		.685	.685	.685	.685	.685	
E	0.240	0260		.247	.248	.247	.247	.247	
F	1.313	1.343		1.325	1.325	1.325	1.324	1.324	
G	0.210	0.230		.220	.221	.220	.220	.220	
H	0.100	0.180		.140	.140	.140	.140	.140	
I	2.470	2.510		2.490	2.490	2.490	2.490	2.490	
J	1.565	1.585		1.579	1.579	1.579	1.579	1.579	
K	0.235	0.240		.238	.238	.238	.238	.238	
L	0.100	0.120		.113	.113	.113	.113	.113	
M	0.990	1.010		1.000	1.000	1.000	1.000	1.000	
N	0.510	0.515		.512	.512	.512	.512	.512	
O	5.990	6.010		6.000	6.000	6.000	6.000	6.000	
P	1.245	1.255		1.250	1.250	1.250	1.250	1.250	
Q	2.495	2.505		2.500	2.500	2.500	2.500	2.500	
R	0.313	0.318		.313	.313	.313	.313	.313	
S	0.315	0.322		.316	.316	.316	.316	.316	
T	2.495	2.505		2.500	2.500	2.500	2.500	2.500	
U	1.357	1.367		1.362	1.362	1.362	1.362	1.362	
V	0.787	0.807		.797	.797	.797	.797	.797	
W	0.540	0.560		.550	.550	.550	.550	.550	
X	1.674	1.684		1.679	1.679	1.679	1.679	1.679	
Y	0.257	0.262		.257	.257	.257	.257	.257	
Z	0.912	0.932		.923	.922	.921	.921	.922	
AA	0.490	0.510		.497	.499	.498	.497	.498	
AB	0.178	0.198		.188	.188	.188	.188	.188	
AC									
AD									
AE									
AF									
Accept/Reject									

Measured by:	JL
Date:	11-11-08

Audited by	[illegible]
Date:	11/11/08

Rev	Date	Change	Revised by	Approved
A		New Issue	RF	
B	99.04.19	Incorporated DSI 9095, DSI 9102 & DSI 9122 Rev. A	RF	
C	99.11.11	Added Dim. R-T	RF	
D	02.12.12	R-format; Added Dim. U-W & DT8683, DT8686 & DT8695 A/B	KJ/RF	
E	06.07.05	Revised per drawing revision C	KJ/JLM	
F	07.03.21	Revised per drawing revision D	KJ/JLM	

Dart Aerospace Ltd

W/O:		WORK ORDER CHANGES					
DATE	STEP	PROCEDURE CHANGE	By	Date	Qty	Approval Chief Eng / Prod Mgr	Approval QC Inspector

Part No: _____ **PAR #:** _____ **Fault Category:** _____ **NCR:** Yes No **DQA:** _____ **Date:** _____

Resolution: _____ **Disposition:** _____ **QA: N/C Closed:** _____ **Date:** _____

NCR:		WORK ORDER NON-CONFORMANCE (NCR)						
DATE	STEP	Description of NC Section A	Corrective Action Section B			Verification Section C	Approval Chief Eng	Approval QC Inspector
			Initial Chief Eng	Action Description Chief Eng	Sign & Date			

NOTE: Date & initial all entries

H:\fFORMS\Quality Assurance\approved QA\NCRWO RevE

DESIGN	DRAWN BY	DART AEROSPACE USA, INC. PORT HADLOCK, WA
CHECKED PH	APPROVED	DRAWING NO. D2662 — REV. D — SHEET 1 OF 1
DATE 06.11.08		TITLE SADDLE INSIDE — SCALE 1:3

A	97.03.25	NEW ISSUE
B	97.07.11	ANGLE AND NOTES ADDED
C	06.05.29	INCORP' DEO 9122/9102/9095/9137
D	06.11.08	R0.188 WAS R0.30; ø0.316 WAS ø0.313

RELEASED
07.02.12

SHOP COPY
RETURN TO
ENGINEERING
UNCONTROLLED COPY
SUBJECT TO AMENDMENT
WITHOUT NOTICE
WORK ORDER
NO 74481 M.L.J
11/10/03

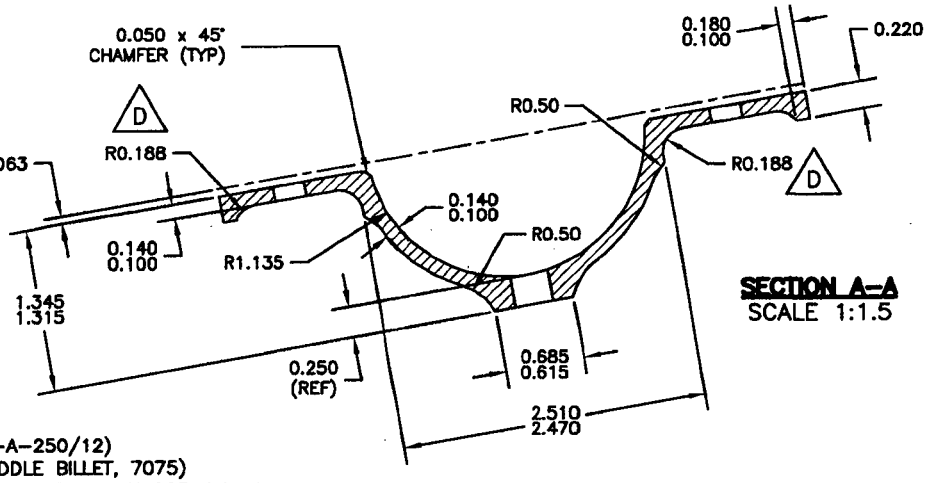

SECTION A–A
SCALE 1:1.5

NOTES:
1) MATERIAL: ALUMINUM 7075–T7351 (QQ–A–250/12)
(MAKE FROM D6101–001 SADDLE BILLET, 7075)
2) FINISH: CHEMICAL CONVERSION COAT PER DART QSI 005 4.1
POWDER COAT GLOSS WHITE (4.3.5.1) PER DART QSI 005 4.3
3) TOLERANCES ARE PER DART QSI 018 UNLESS OTHERWISE NOTED
4) BREAK ALL SHARP EDGES 0.010 TO 0.020
5) ALL DIMENSIONS ARE IN INCHES
6) D2662–1 SHOWN (D2662–2 IS OPPOSITE)

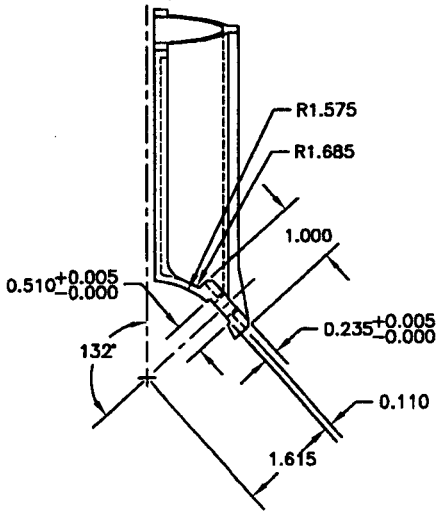

D2662–1 SADDLE INSIDE

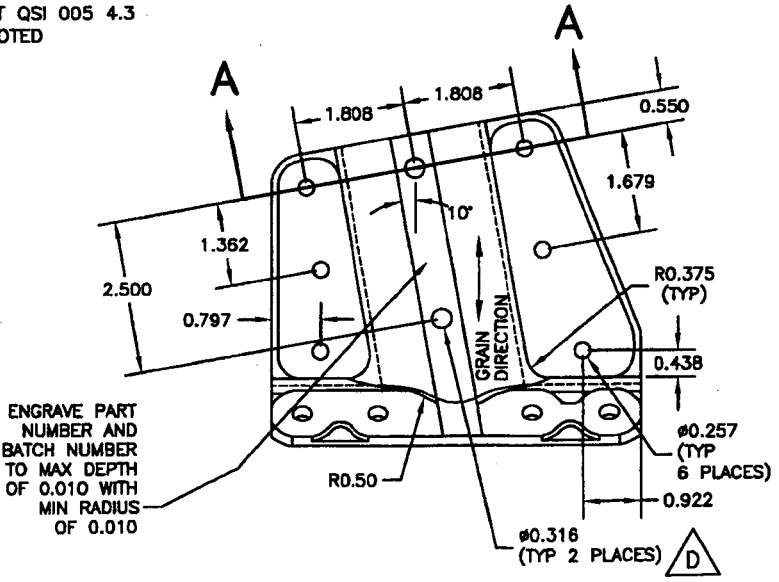

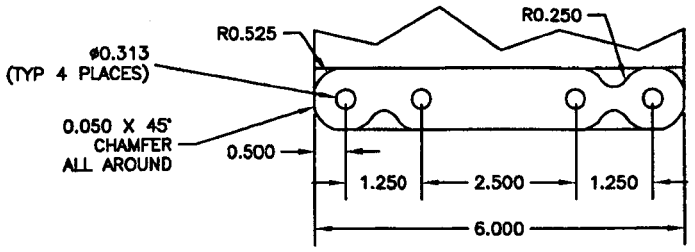

Copyright © 1997 by DART AEROSPACE USA, INC.
THIS DOCUMENT IS PRIVATE AND CONFIDENTIAL AND IS SUPPLIED ON THE EXPRESS CONDITION THAT IT IS NOT TO BE USED FOR ANY PURPOSE OR COPIED OR COMMUNICATED TO ANY OTHER PERSON WITHOUT WRITTEN PERMISSION FROM DART AEROSPACE USA, INC.

Dart Aerospace Ltd

W/O:		WORK ORDER CHANGES					
DATE	STEP	PROCEDURE CHANGE	By	Date	Qty	Approval Chief Eng / Prod Mgr	Approval QC Inspector

Part No: _____ **PAR #:** _____ **Fault Category:** _____ **NCR:** Yes No **DQA:** _____ **Date:** _____

Resolution: _____ **Disposition:** _____ **QA: N/C Closed:** _____ **Date:** _____

NCR:		WORK ORDER NON-CONFORMANCE (NCR)						
DATE	STEP	Description of NC Section A	Corrective Action Section B			Verification Section C	Approval Chief Eng	Approval QC Inspector
			Initial Chief Eng	Action Description Chief Eng	Sign & Date			

NOTE: Date & initial all entries